OPERABLE IMPACT RESISTANT WINDOW SCREEN

GENERAL NOTES

1. THIS PRODUCT HAS BEEN DESIGNED AND TESTED TO COMPLY WITH THE REQUIREMENTS OF THE FLORIDA BUILDING CODE, INCLUDING THE HIGH VELOCITY HURRICANE ZONE (HVHZ).

2. THIS PRODUCT IS RATED IMPACT RESISTANT FOR LARGE AND SMALL MISSILE, THEREFORE, MIAMI-DADE COUNTY'S APPROVED HURRICANE PROTECTION SYSTEM (SHUTTERS) ARE NOT REQUIRED WHEN PRODUCT IS USED OR INSTALLED IN WIND-BORNE DEBRIS REGIONS.

3. THE DESIGN LOADS SHOWN IN THIS DOCUMENT FOR THIS PRODUCT ARE ALLOWABLE DESIGN LOADS. ULTIMATE DESIGN LOADS OBTAINED FROM ASCE 7-10, MULTIPLIED BY 0.6 SHALL BE LESS THAN OR EQUAL TO PRODUCT'S MAXIMUM DESIGN LOADS IN THIS DOCUMENT.

4. WOOD BUCKS DEPICTED AS "1X" ARE BUCKS WHOSE TOTAL THICKNESS IS LESS THAN 1-1/2" AND ARE OPTIONAL IF PRODUCT CAN BE INSTALLED DIRECTLY TO SUBSTRATE.
   WOOD BUCKS DEPICTED AS "2X" ARE BUCKS WHOSE TOTAL THICKNESS IS 1-1/2" OR GREATER.
   "1X" AND "2X" WOOD BUCKS, WHEN USED, SHALL BE DESIGNED AND ANCHORED TO PROPERLY TRANSFER ALL LOADS IMPOSED ON THEM BY THE DOOR TO THE BUILDING STRUCTURE.
   THE DESIGN AND INSTALLATION TO THE SUBSTRATE OF WOOD BUCKS TO BE ENGINEERED BY OTHER OR AS APPROVED BY THE AUTHORITY HAVING JURISDICTION.

5. THE INSTALLATION CONDITIONS DEPICTED ON DETAILS OF THIS DOCUMENT ARE GENERIC AND MAY NOT REFLECT ACTUAL CONDITIONS FOR A SPECIFIC SITE.
   SITE SPECIFIC CONDITIONS THAT DEVIATE FROM THE CONDITIONS DETAILED HEREIN, SHALL BE PREPARED BY A REGISTERED ENGINEER OR ARCHITECT WHO WILL BECOME RESPONSIBLE FOR THE PROPER USE OF THIS PRODUCT APPROVAL DOCUMENT AND SHALL BE REVIEWED BY THE AUTHORITY HAVING JURISDICTION.

6. INSTALLATION ANCHOR CAPACITY, ANCHOR SPACING, ANCHOR EMBEDMENT AND EDGE DISTANCE LIMITS ARE BASED ON MINIMUM PROPERTIES OF SUBSTRATE MATERIALS, AS INDICATED IN ANCHOR NOTES AND SPECIFICATIONS SECTION.

7. MATERIALS, INCLUDING BUT NOT LIMITED TO STEEL THAT COME INTO CONTACT WITH OTHER DISSIMILAR MATERIALS, SHALL MEET THE REQUIREMENTS OF THE FLORIDA BUILDING CODE FOR CORROSION RESISTANCE.

8. MATERIAL FOR WINDOWS FRAME AND PANELS TO BE WOOD WITH A MINIMUM SPECIFIC GRAVITY OF 0.55

9. EGRESS REQUIREMENT: COMPLIANCE WITH THIS FEATURE, WHEN REQUIRED, SHALL BE REVIEWED BY THE AUTHORITY HAVING JURISDICTION.

ANCHOR NOTES AND SPECIFICATIONS

INSTALLATION ANCHORS SHALL BE COATED CARBON STEEL CORROSION RESISTANT AND INSTALLED FOLLOWING ALL OF THE RECOMMEDATIONS OF THE ANCHOR'S MANUFACTURER. ANCHOR TYPE SHALL BE AS INDICATED BELOW AND AS NOTED ON INSTALLATION DETAIL DRAWINGS OF THIS DOCUMENT. ANCHOR EMBEDMENT INTO SUBSTRATE MATERIAL SHALL BE BEYOND ANY FINISH MATERIAL.

1.- ANCHOR TYPE AND EMBEDMENT

ø1/4" X 2 1/2" ULTRACON HEX FLANGE HEAD (HFH) BY DEWALT

- INTO WOOD FRAMING OR "2X" WOOD BUCK, 1-1/2" MIN. EMBEDMENT
- INTO POURED CONCRETE OR CONCTRETE BLOCK WALL, 1-3/4" MIN. EMBEDMENT

#14 SMS. ITW BUILDEX, INC. STAINLESS STEEL TEK OR SELF-DRILLING SCREW (GRADE 5)

- INTO METAL STRUCTURES:

ANCHOR LENGTH SHALL BE SUFFICIENT AS TO ACHIEVE 3 THREADS MIN. BEYOND THE STRUCTURE'S INTERIOR WALL.

a) STEEL STUDS: 16 ga MIN., fy = 36 ksi YIELD STRENGTH MIN.
b) ALUMINUM: 1/8" WALL THICKNESS MIN., ALLOY 6063-T6 MIN.

2.- EDGE DISTANCE

EDGE DISTANCE SHALL BE BEYOND ANY FINISH MATERIAL AS INDICATED BELOW FOR THE FOLLOWING SUBSTRATES.

- POURED CONCRETE AND CONCRETE BLOCK WALL: 2-3/8" MIN.
- METAL STRUCTURES: 1/2" MIN.
- WOOD: 1" MIN.

3.- SUBSTRATE MATERIAL REQUIREMENTS

ANCHOR CAPACITIES ARE BASED ON SUBSTRATE MATERIALS WITH THE FOLLOWING PROPERTIES:

- WOOD: MINIMUM SPECIFIC GRAVITY OF 0.55
- STEEL: MINIMUM YIELD STRENGTH OF 36 ksi
- ALUMINUM: ALLOY AND TEMPER 6063-T5 MINIMUM, MINIMUM WALL THICKNESS OF 0.125"
- CONCRETE: MINIMUM COMPRESIVE STRENGTH OF 3000 psi
- CONCRETE BLOCK OR MASONRY: MINIMUM COMPRESIVE STRENGTH OF 3000 psi, CONFORMING WITH ASTM C-90 GROUT WITH MINIMUM COMPRESSIVE STRENGTH OF 2000 psi, CONFORMING TO ASTM C-476

PRODUCT
as complying with the Florida
Building Code
Acceptance No 23-1222.02
Expiration Date 05/18/2027
By
Miami Dade Product Control

DRAWING INDEX

SHEET 1. -GENERAL NOTES / ANCHOR NOTES AND SPECIFICATIONS
SHEET 2. -DOOR ELEVATIONS / ANCHOR LAYOUT
SHEET 2A -DOOR ELEVATIONS / ANCHOR LAYOUT
SHEET 3. -VERTICAL SECTION DETAILS
SHEET 4. -VERTICAL SECTION DETAILS
SHEET 5. -HORIZONTAL SECTION DETAILS

Signed & Sealed

December 21 2023

OSCAR YAMIR SOUFFRONT
FLA. REG. # 72462
C.A.N. 29697
No. 72462
STATE OF FLORIDA
PROFESSIONAL ENGINEER

Souffront Construction's Group, Ltd. Co.
2942 SW 156th AVENUE
Miami, FL 33185
Phone (786) 306-9417
Souffrontengineering@gmail.com

C.G.S. SALES INC.
44729 St. Rt.14
Columbiana, OH 44408
Phone (330) 501-4396 FAX No (330) 457-9539

OPERABLE IMPACT RESISTANT WINDOW SCREEN
LARGE AND SMALL MISSILE IMPACT RESISTANT

GENERAL NOTES / ANCHOR NOTES AND SPECIFICATIONS

REV.	DATE	DESCRIPTION
1	05-16-2018	2017 FLORIDA BUILDING CODE (FBC) 6TH EDITION
2	06-14-2021	2020 FLORIDA BUILDING CODE (FBC) 7TH EDITION
3	12-20-2023	2023 FLORIDA BUILDING CODE (FBC) 8TH EDITION

PREPARED BY OSCAR YAMIR SOUFFRONT, P.E.
2171 SW BURMAN LANE
PORT SAINT LUCIE, FL 34984 PH. (786) 306-9417
FLORIDA LICENSE No. 72462
CERTIFICATE OF AUTHORIZATION No. 29697

DRAWN: YYS
CHECKED: OYS
SCALE: AS NOTED
DATE:12-16-16

DRAWING No.	SHEET
SCG0509-16	1 OF 11

OPERABLE IMPACT RESISTANT WINDOW SCREEN

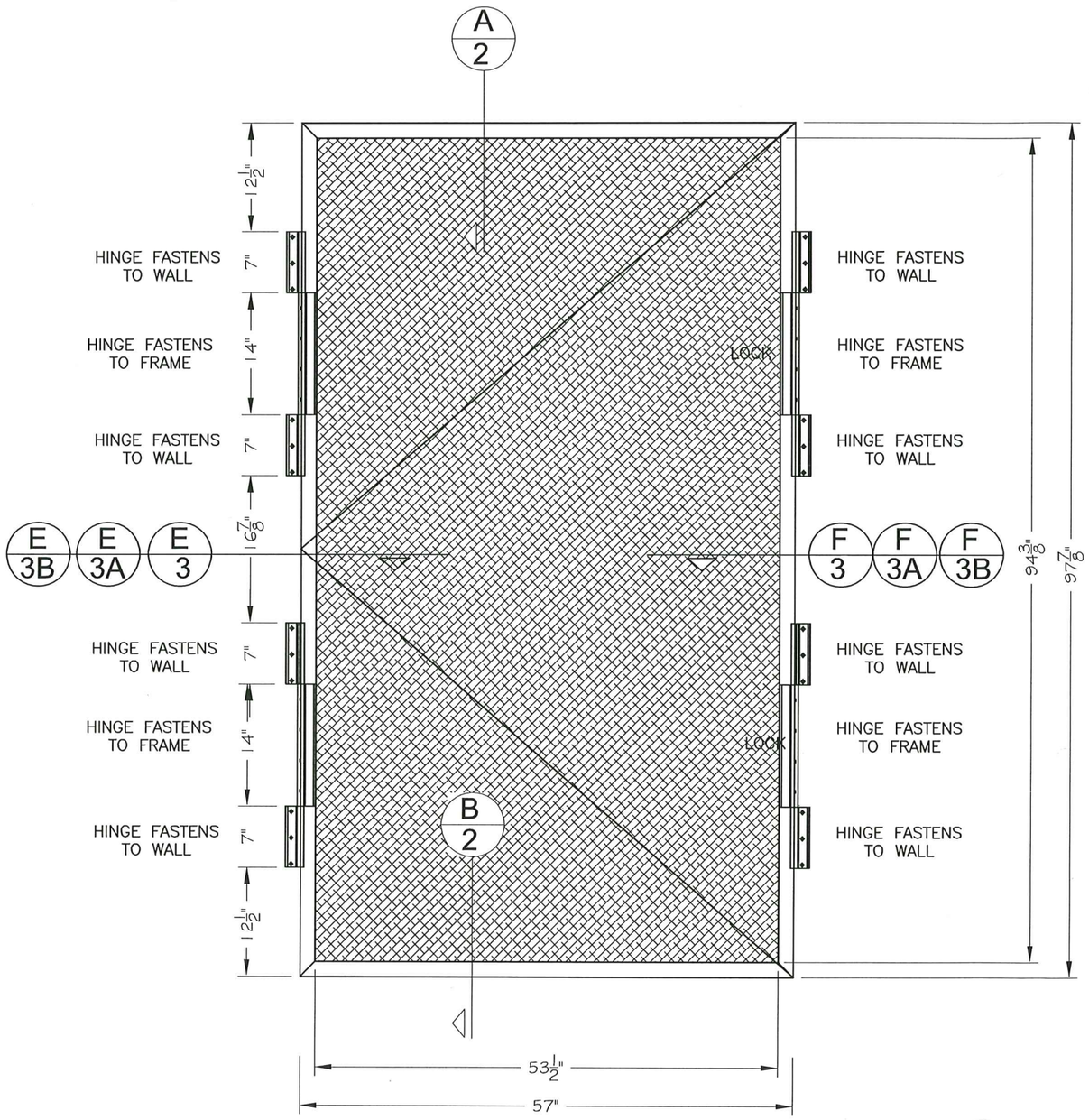

ELEVATION No. 1 (TYP.)

TABLE No. 1

MAXIMUM ALLOWABLE DESIGN PRESSURES (DP) OVERALL AND ROUGH OPENING SIZES
TYPE: HINGES AND LOCKS ON SIDES
MAXIMUM INWARD PRESSURE = + 100 PSF
MAXIMUM LEEWARD PRESSURE= – 100 PSF
MAXIMUM OVERAL SIZE (INCHES)
WIDTH = 57"
HEIGHT= 97 7/8"
MAXIMUM ROUGH OPENING (INCHES)
WIDTH = 53 1/2"
HEIGHT= 94 3/8"

INSTRUCTIONS:

STEP 1 DETERMINE DESIGN WIND PRESSURE REQUIREMENTS BASED ON WIND VELOCITY, BLDG. HEIGHT, WIND ZONE USING APPLICABLE ASCE 7 STANDARD.
INWARD AND LEEWARD PRESSURE DETERMINED MUST BE EQUAL OR LESS THAN THE SPECIFIED IN TABLE No 1

STEP 2 SEE TABLE No 1 ON SHEET 2 FOR MAXIMUM OVERAL SIZE AND ROUGH OPENING

STEP 3 CHECK SUBSTRATE WHERE HINGES WILL BE ANCHORED

STEP 4 CHOOSE ANCHORS, SPACING, EMBEDMENT AND EDGE DISTANCE AS PER TABLE No. 3.

STEP 5 ANCHOR QUANTITY AS SHOWN IN ELEVATION No. 1 (TYP.)

PRODUCT REVISED
as complying with the Florida
Building Code
Acceptance No. 23-1222.02
Expiration Date 05/18/2027
By
Miami Dade Product Control

Signed & Sealed
December 21 2023

OSCAR YAMIR SOUFFRONT
FLA. PE. # 72462
C.A.N. 29697
No. 72462
STATE OF FLORIDA
PROFESSIONAL ENGINEER

Souffront Construction's Group, Ltd. Co.
2942 SW 156th AVENUE
Miami, FL 33185
Phone (786) 306-9417
Souffrontengineering@gmail.com

C.G.S. SALES INC.
44729 St. Rt.14
Columbiana, OH 44408
Phone (330) 501-4396 FAX No (330) 457-9539

OPERABLE IMPACT RESISTANT WINDOW SCREEN
LARGE AND SMALL MISSILE IMPACT RESISTANT

REV.	DATE	DESCRIPTION
1	05-16-2018	2017 FLORIDA BUILDING CODE (FBC) 6TH EDITION
2	06-14-2021	2020 FLORIDA BUILDING CODE (FBC) 7TH EDITION
3	12-20-2023	2023 FLORIDA BUILDING CODE (FBC) 8TH EDITION

PREPARED BY OSCAR YAMIR SOUFFRONT, P.E.
2171 SW BURMAN LANE
PORT SAINT LUCIE, FL 34984 PH. (786) 306-9417
FLORIDA LICENSE No. 72462
CERTIFICATE OF AUTHORIZATION No. 29697

DRAWN: YYS
CHECKED: OYS
SCALE: AS NOTED
DATE:12-16-16

DRAWING No. SCG0509-16

SHEET 2 OF11

OPERABLE IMPACT RESISTANT WINDOW SCREEN

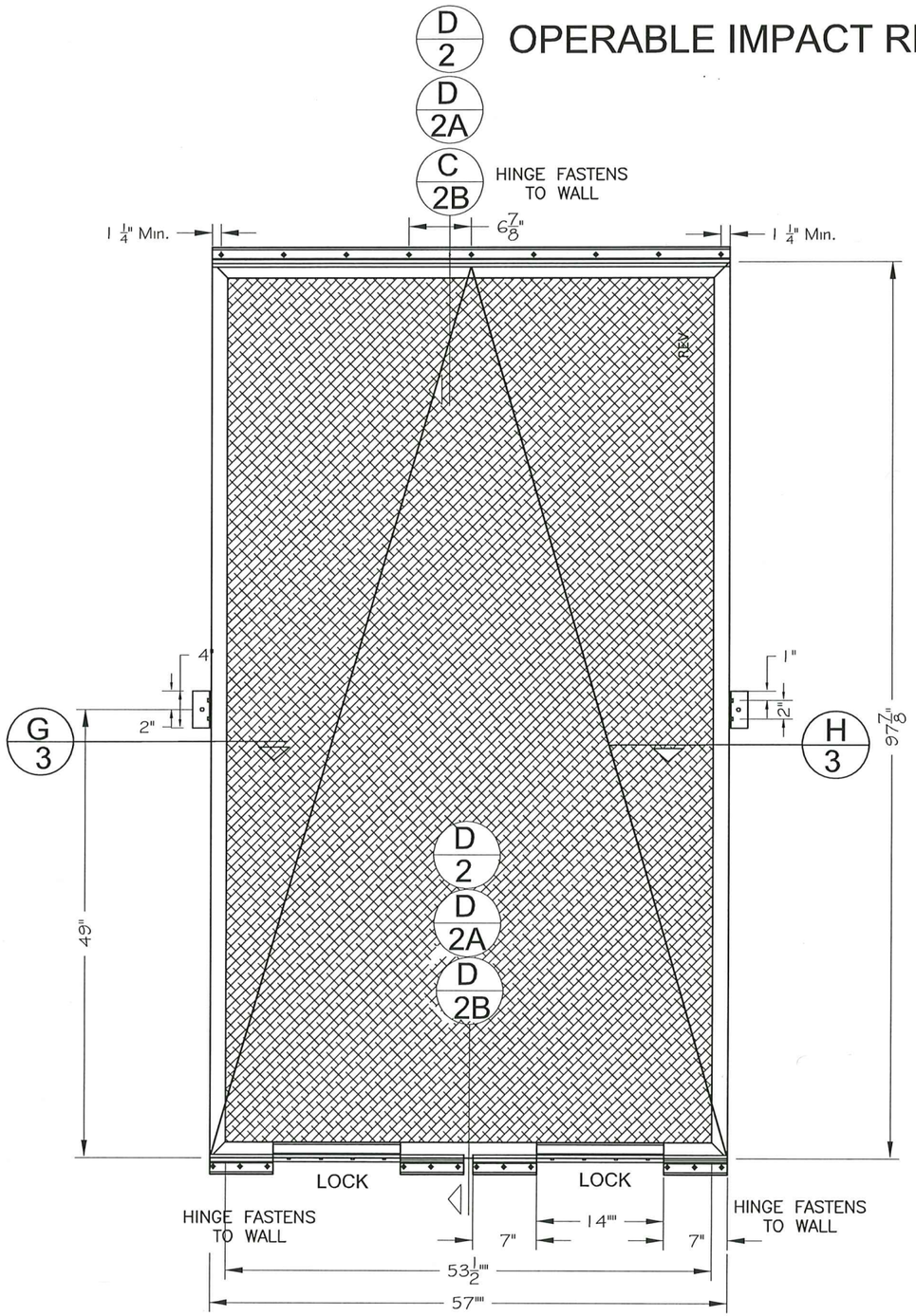

ELEVATION No. 2 (TYP.)

TABLE No. 2

MAXIMUM ALLOWABLE DESIGN PRESSURES (DP) OVERALL AND ROUGH OPENING SIZES	
TYPE: HINGES AND LOCKS TOP & BOTTOM	
MAXIMUM INWARD PRESSURE =	+ 100 PSF
MAXIMUM LEEWARD PRESSURE=	– 100 PSF
MAXIMUM OVERAL SIZE (INCHES)	
WIDTH =	57"
HEIGHT=	97 7/8"
MAXIMUM ROUGH OPENING (INCHES)	
WIDTH =	57 1/2"
HEIGHT=	97 7/8"

INSTRUCTIONS:

STEP 1 DETERMINE DESIGN WIND PRESSURE REQUIREMENTS BASED ON WIND VELOCITY, BLDG. HEIGHT, WIND ZONE USING APPLICABLE ASCE 7 STANDARD.
INWARD AND LEEWARD PRESSURE DETERMINED MUST BE EQUAL OR LESS THAN THE SPECIFIED IN TABLE No 1

STEP 2 SEE TABLE No 2 ON SHEET 3 FOR MAXIMUM OVERAL SIZE AND ROUGH OPENING

STEP 3 CHECK SUBSTRATE WHERE HINGES WILL BE ANCHORED

STEP 4 CHOOSE ANCHORS, SPACING, EMBEDMENT AND EDGE DISTANCE AS PER TABLE No. 3.

STEP 5 ANCHOR QUANTITY AS SHOWN IN ELEVATION No. 2 (TYP,)

PRODUCT REVISED
as complying with the Florida Building Code
Acceptance No 23-1222.02
Expiration Date 05/15/2027
By
Miami Dade Product Control

Signed & Sealed
December 21 2023

OSCAR YAMIR SOUFFRONT
FLA. PE # 72462
C.A.N. 29697
No. 72462
STATE OF FLORIDA
PROFESSIONAL ENGINEER

Souffront Construction's Group, Ltd. Co.
2942 SW 156th AVENUE
Miami, FL 33185
Phone (786) 306-9417
Souffrontengineering@gmail.com

C.G.S. SALES INC.
44729 St. Rt.14
Columbiana, OH 44408
Phone (330) 501-4396 FAX No (330) 457-9539

OPERABLE IMPACT RESISTANT WINDOW SCREEN
LARGE AND SMALL MISSILE IMPACT RESISTANT

REV.	DATE	DESCRIPTION
1	05-16-2018	2017 FLORIDA BUILDING CODE (FBC) 6TH EDITION
2	06-14-2021	2020 FLORIDA BUILDING CODE (FBC) 7TH EDITION
3	12-20-2023	2023 FLORIDA BUILDING CODE (FBC) 8TH EDITION

PREPARED BY OSCAR YAMIR SOUFFRONT, P.E.
2171 SW BURMAN LANE
PORT SAINT LUCIE, FL 34984 PH. (786) 306-9417
FLORIDA LICENSE No. 72462
CERTIFICATE OF AUTHORIZATION No. 29697

DRAWN: YYS
CHECKED: OYS
SCALE: AS NOTED
DATE:12-16-16

DRAWING No. SCG0509-16

SHEET 3 OF 11

OPERABLE IMPACT RESISTANT WINDOW SCREEN

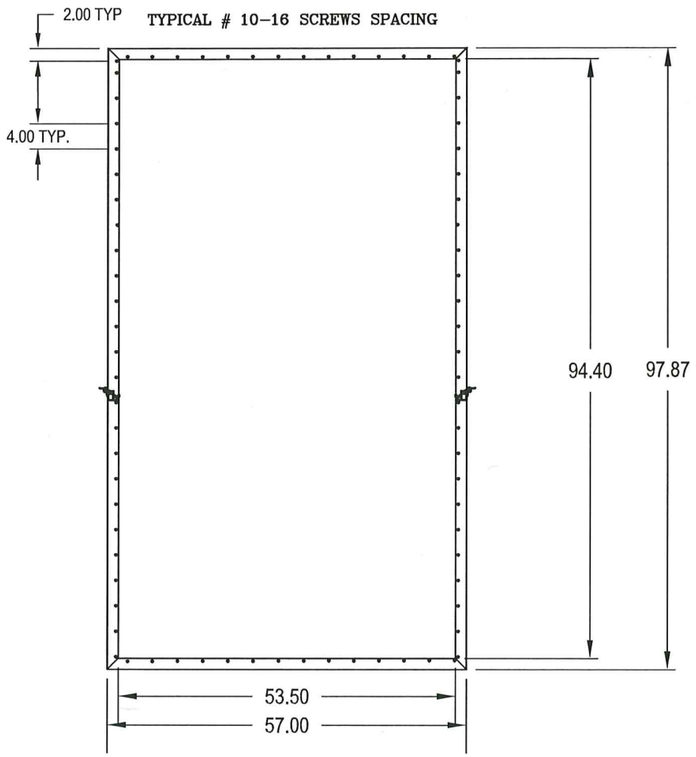

BACK ELEVATION (TYP.)

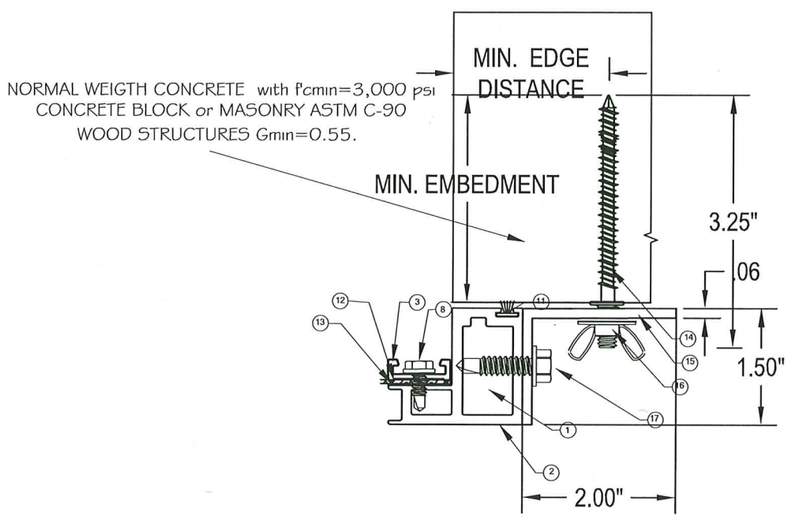

H/3 RIGHT HORIZONTAL SECTION

TABLE No. 3

TYPE 'A'

1/4" DIA ULTRACON BY 'DEWALT' (Fu=177 KSI, Fy=155 KSI)

DIRECTLY INTO CONCRETE
WITH 1-3/4" MIN. EMBED.

DIRECTLY INTO CONCRETE BLOCK OR MASONRY
WITH 1-3/4" MIN. EMBED.

DIRECTLY INTO WOOD STRUCTURE
WITH 1-1/2" MIN. EMBED..

ANCHOR EDGE DISTANCES

INTO CONCRETE = 3-1/8" MIN.

INTO CONCRETE BLOCK OR MANSONRY = 3-1/8" MIN.

INTO WOOD STRUCTURE = 1" MIN.

TYPE 'B'

1/4" DIA SELF DRILLING TEK SCREWS (Fu=100 KSI, Fy=65 KSI)

DIRECTLY INTO METAL STRUCTURE (FULL EMBEDMENT.)
1/8" MIN. THICKNESS STEEL ASTM-A36 OR BETTER
1/8" MIN. THICKNESS ALUMINUM 6063-T5 OR BETTER
(STEEL IN CONTACT WITH ALUMINUM TO BE PLATED OR PAINTED)

ANCHOR EDGE DISTANCES

INTO METAL STRUCTURE =1/2" MIN.

ANCHOR NOTES:

1.- WHERE INSTALLATION IS TO WOOD FRAMING OR WOOD BUCKS, THE WOOD FRAME OR WOOD BUCK SHALL BE ENGINEERED BY OTHERS TO TRANSFER THE LOADS INTO THE STRUCTURE.

2.- SPACING O.C. AS PER TYPICAL ELEVATIONS SHOWN BELOW

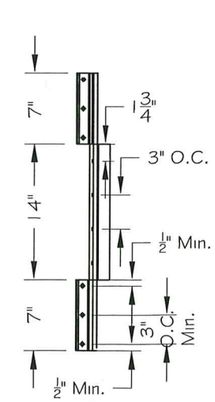

ELEVATION HINGES & LOCKS (TYP)

NOTE; HINGES AND LOCK FOR USE VERTICAL OR HORIZONTAL.

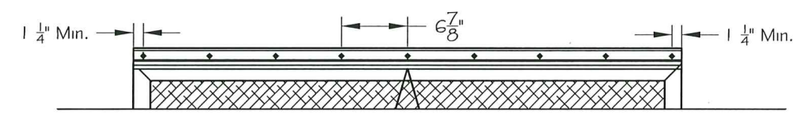

TOP HINGE ELEVATION (TYP)

PRODUCT REVISED
as complying with the Florida
Building Code
Acceptance No 23-1222.02
Expiration Date 05/14/2027
By
Miami Dade Product Control

METAL STRUCTURES NOT BY CGS SALES INC.
MUST SUPPORT LOADS IMPOSED BY THE WINDOW SCREEN
AND TRANSFER THEM TO THE BUILDING STRUCTURE.

Signed & Sealed

December 21, 2023

OSCAR YAMIR SOUFFRONT
FLA. PE. # 72462
C.A.N. 29697
No. 72462
STATE OF FLORIDA
PROFESSIONAL ENGINEER

Souffront Construction's Group, Ltd. Co.
2942 SW 156th AVENUE
Miami, FL 33185
Phone (786) 306-9417
Souffrontengineering@gmail.com

C.G.S. SALES INC.
44729 St. Rt.14
Columbiana, OH 44408
Phone (330) 501-4396 FAX No (330) 457-9539

OPERABLE IMPACT RESISTANT WINDOW SCREEN
LARGE AND SMALL MISSILE IMPACT RESISTANT

REV.	DATE	DESCRIPTION
1	05-16-2018	2017 FLORIDA BUILDING CODE (FBC) 6TH EDITION
2	06-14-2021	2020 FLORIDA BUILDING CODE (FBC) 7TH EDITION
3	12-20-2023	2023 FLORIDA BUILDING CODE (FBC) 8TH EDITION

PREPARED BY OSCAR YAMIR SOUFFRONT, P.E.
2171 SW BURMAN LANE PH. (786) 306-9417
PORT SAINT LUCIE, FL 34984
FLORIDA LICENSE No. 72462
CERTIFICATE OF AUTHORIZATION No. 29697

DRAWN: YYS
CHECKED: OYS
SCALE: AS NOTED
DATE: 12-16-16

DRAWING No. SCG0509-16

SHEET 4 OF 11

OPERABLE IMPACT RESISTANT WINDOW SCREEN

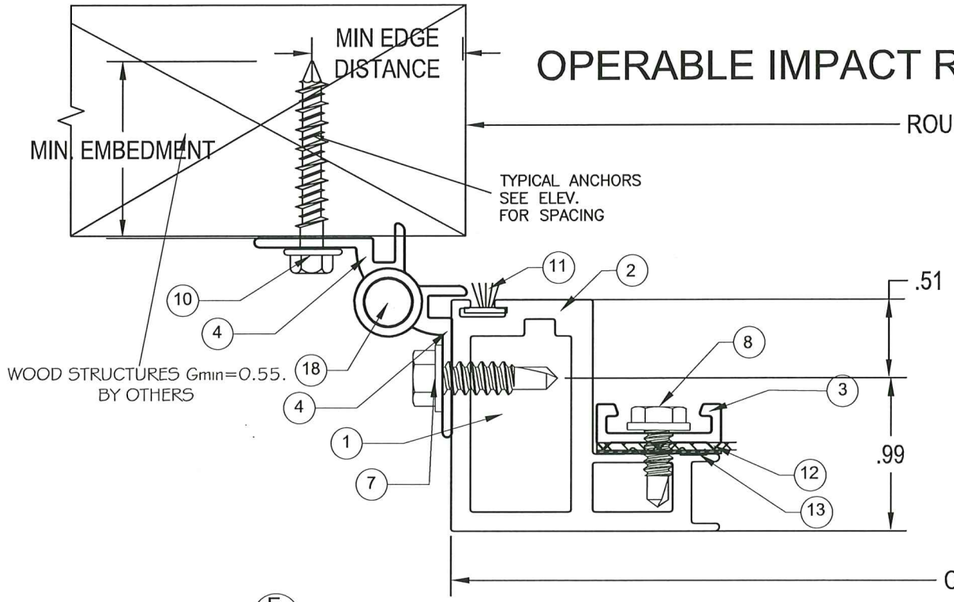

E/3 LEFT HORIZONTAL SECTION

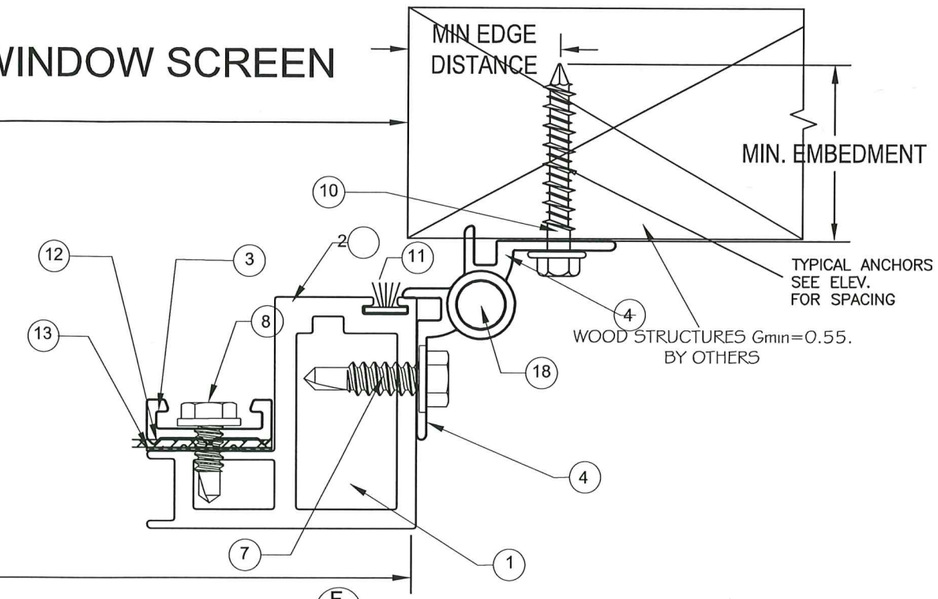

F/3 RIGHT HORIZONTAL SECTION

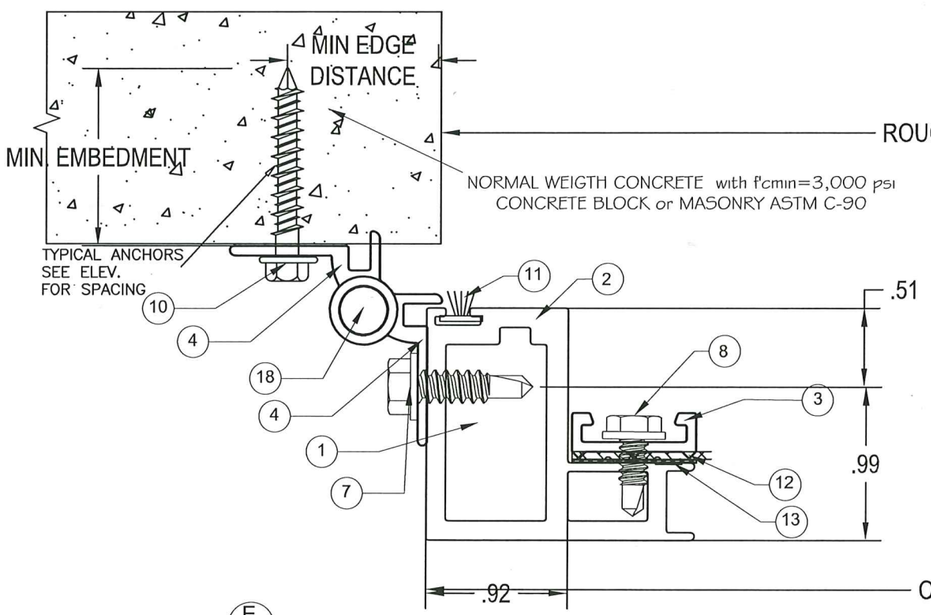

E/3A LEFT HORIZONTAL SECTION

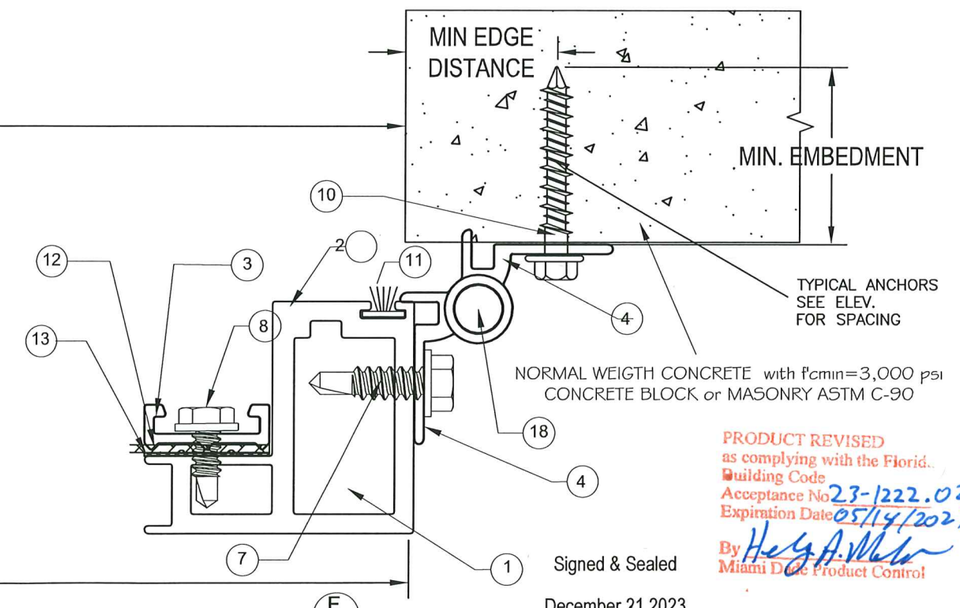

F/3A RIGHT HORIZONTAL SECTION

NOTES.
1.– MINIMUM EDGE DISTANCE AND EMBEDMENT AS PER TABLE # 3.
2.–SPACING AS PER TYPICAL ELEVATION # 1 OR # 2.
¼" MAXIMUM GAP OR SHIM IN ANCHORS
MORE THAN ¼" GAP SHALL BE ENGINEERED BY FLORIDA PROFESSIONAL ENGINEER.

PRODUCT REVISED
as complying with the Florid.
Building Code
Acceptance No 23-1222.02
Expiration Date 05/14/2027
By Hedy A. Molina
Miami Dade Product Control

Signed & Sealed
December 21 2023

OSCAR YAMIR SOUFFRONT
FLA. PE # 72462
C.A.N. 29697
OSCAR YAMIR SOUFFRONT
No. 72462
STATE OF FLORIDA
PROFESSIONAL ENGINEER

Souffront Construction's Group, Ltd. Co.
2942 SW 156th AVENUE
Miami, FL 33185
Phone (786) 306-9417
Souffrontengineering@gmail.com

C.G.S. SALES INC.
44729 St. Rt.14
Columbiana, OH 44408
Phone (330) 501-4396 FAX No (330) 457-9539

OPERABLE IMPACT RESISTANT WINDOW SCREEN
LARGE AND SMALL MISSILE IMPACT RESISTANT

GENERAL NOTES / ANCHOR NOTES AND SPECIFICATIONS

REV.	DATE	DESCRIPTION
1	05-16-2018	2017 FLORIDA BUILDING CODE (FBC) 6TH EDITION
2	06-14-2021	2020 FLORIDA BUILDING CODE (FBC) 7TH EDITION
3	12-20-2023	2023 FLORIDA BUILDING CODE (FBC) 8TH EDITION

PREPARED BY OSCAR YAMIR SOUFFRONT, P.E.
2171 SW BURMAN LANE
PORT SAINT LUCIE, FL 34984 PH. (786) 306-9417
FLORIDA LICENSE No. 72462
CERTIFICATE OF AUTHORIZATION No. 29697

DRAWN: YYS
CHECKED: OYS
SCALE: AS NOTED
DATE: 12-16-16

DRAWING No. SCG0509-16

SHEET 5 OF 11

OPERABLE IMPACT RESISTANT WINDOW SCREEN

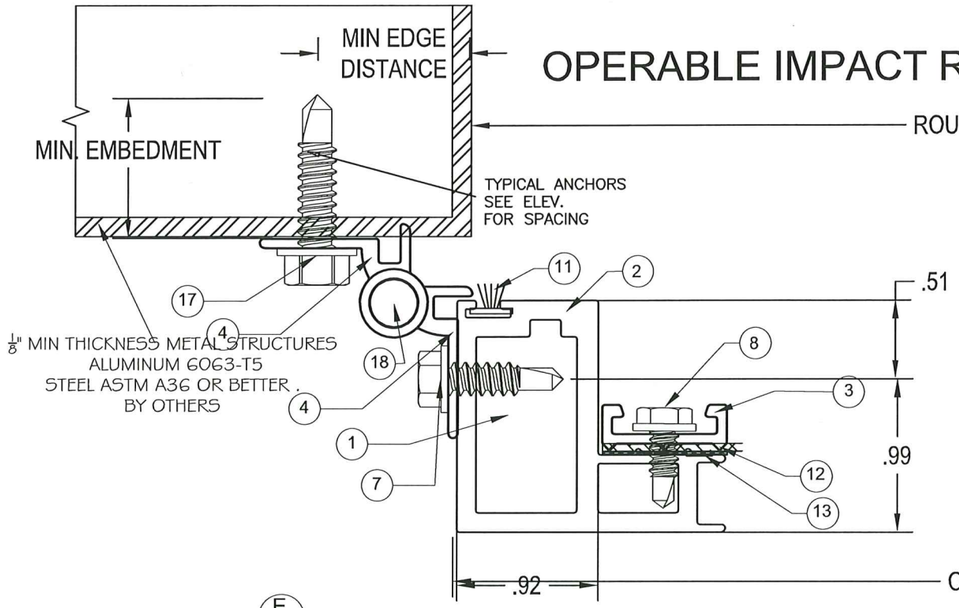

E/3B LEFT HORIZONTAL SECTION

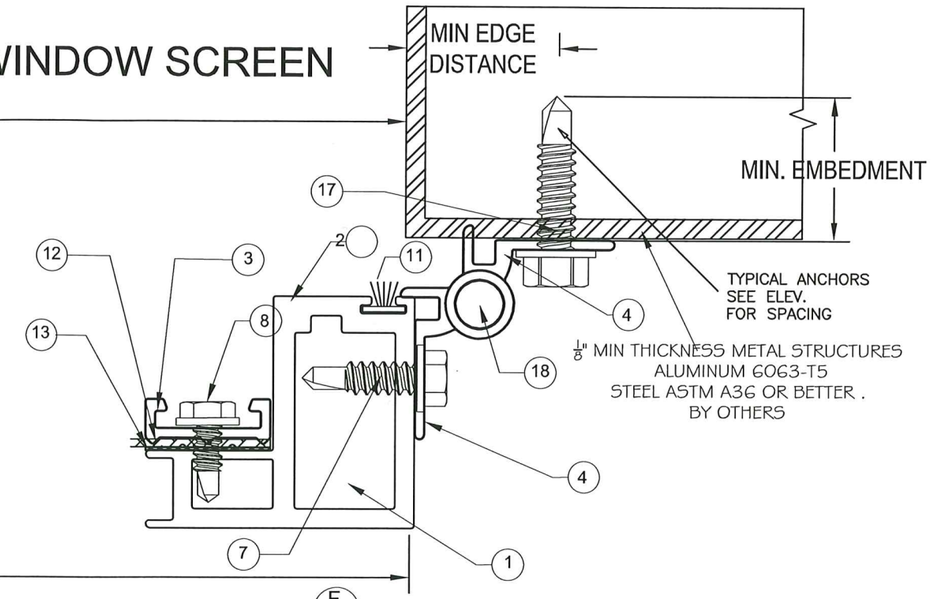

F/3B RIGHT HORIZONTAL SECTION

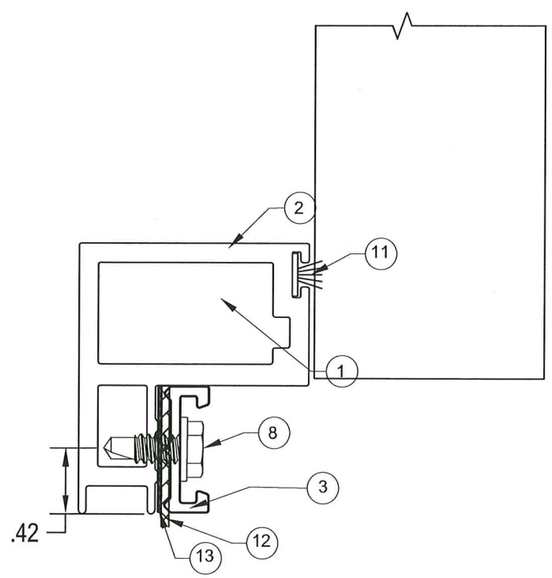

A/2 TOP VERTICAL SECTION

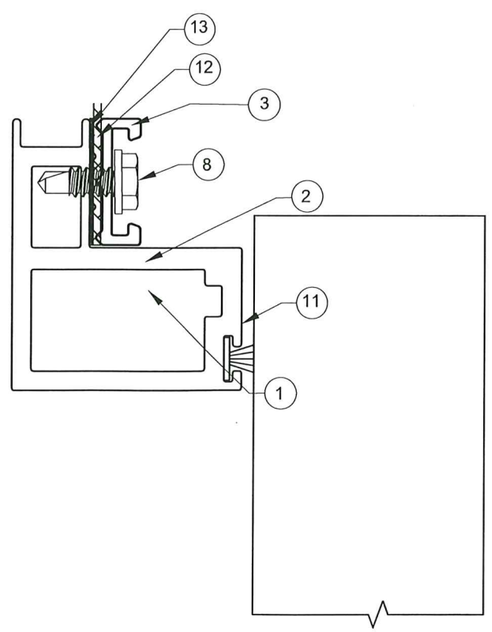

B/2 BOTTOM VERTICAL SECTION

PRODUCT REVISED
as complying with the Florida Building Code
Acceptance No 23-1222.02
Expiration Date 05/18/2027
By
Miami Dade Product Control

NOTES.
1.– MINIMUM EDGE DISTANCE AND EMBEDMENT AS PER TABLE # 3.
2.–SPACING AS PER TYPICAL ELEVATION # 1 OR # 2.
1/4" MAXIMUM GAP OR SHIM IN ANCHORS
MORE THAN 1/4" GAP SHALL BE ENGINEERED BY FLORIDA PROFESSIONAL ENGINEER.

Signed & Sealed
December 21 2023

OSCAR YAMIR SOUFFRONT
FLA. PE # 72462
C.A.M. 29697
OSCAR YAMIR SOUFFRONT
No. 72462
STATE OF FLORIDA
PROFESSIONAL ENGINEER

Souffront Construction's Group, Ltd. Co.
2942 SW 156th AVENUE
Miami, FL 33185
Phone (786) 306-9417
Souffrontengineering@gmail.com

C.G.S. SALES INC.
44729 St. Rt.14
Columbiana, OH 44408
Phone (330) 501-4396 FAX No (330) 457-9539

OPERABLE IMPACT RESISTANT WINDOW SCREEN
LARGE AND SMALL MISSILE IMPACT RESISTANT

REV.	DATE	DESCRIPTION
1	05-16-2018	2017 FLORIDA BUILDING CODE (FBC) 6TH EDITION
2	06-14-2021	2020 FLORIDA BUILDING CODE (FBC) 7TH EDITION
3	12-20-2023	2023 FLORIDA BUILDING CODE (FBC) 8TH EDITION

PREPARED BY OSCAR YAMIR SOUFFRONT, P.E.
2171 SW BURMAN LANE
PORT SAINT LUCIE, FL 34984 PH. (786) 306-9417
FLORIDA LICENSE No. 72462
CERTIFICATE OF AUTHORIZATION No. 29697

DRAWN: YYS
CHECKED: OYS
SCALE: AS NOTED
DATE:12-16-16

DRAWING No. SCG0509-16

SHEET 6 OF 11

OPERABLE IMPACT RESISTANT WINDOW SCREEN

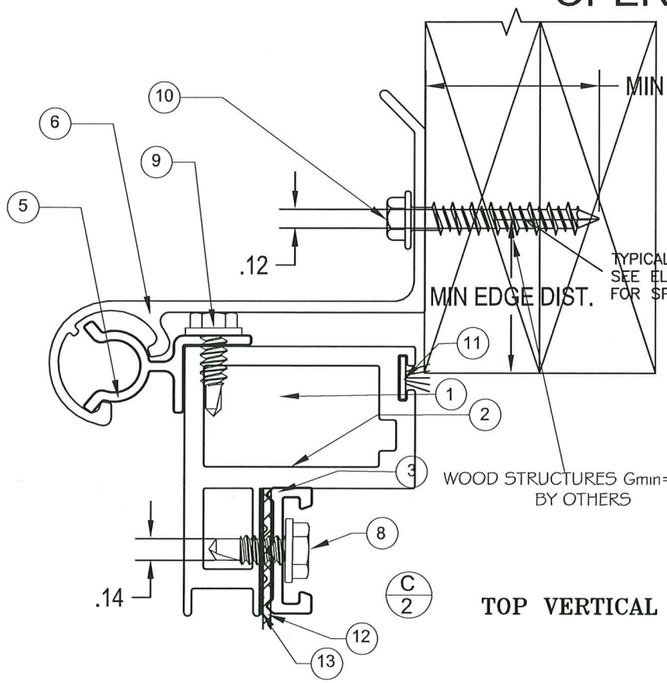

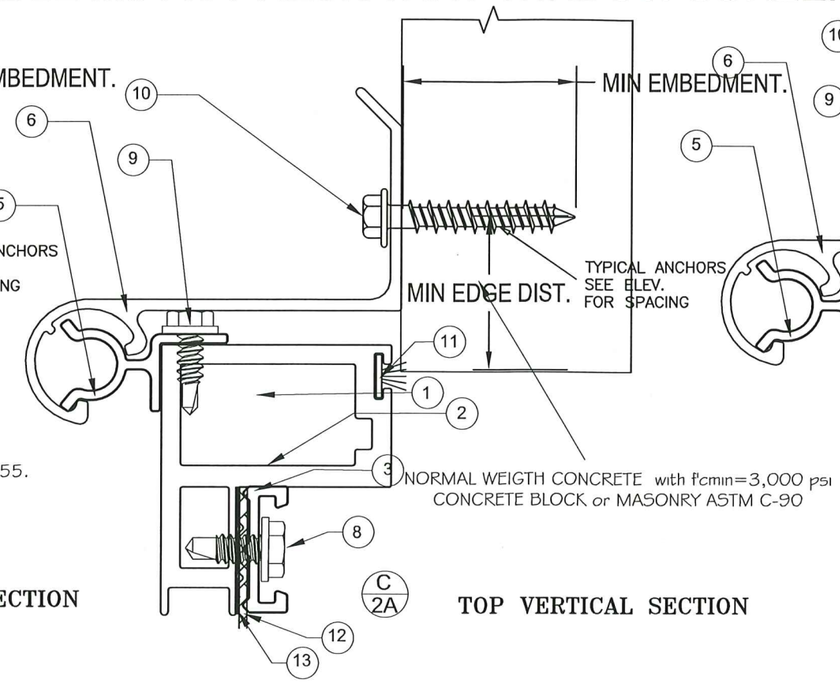

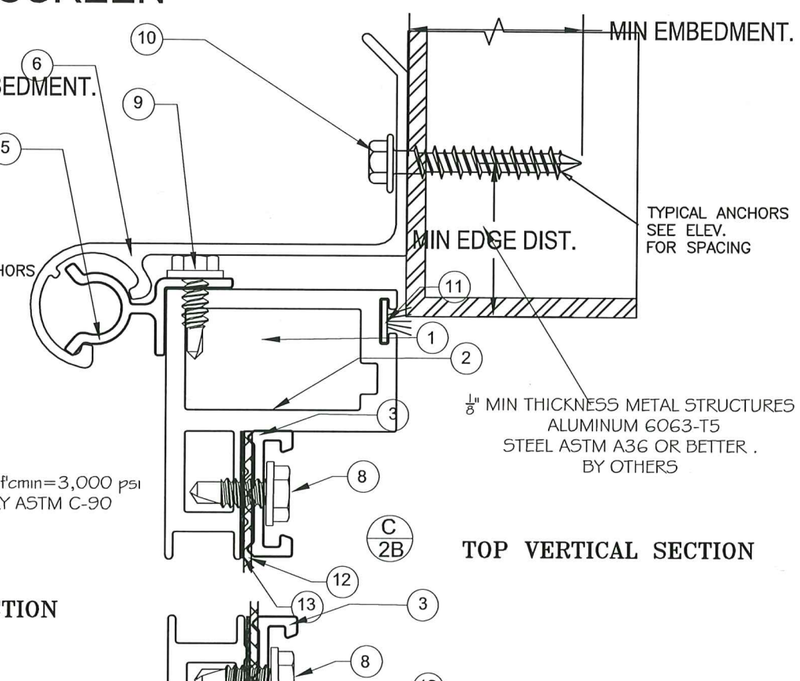

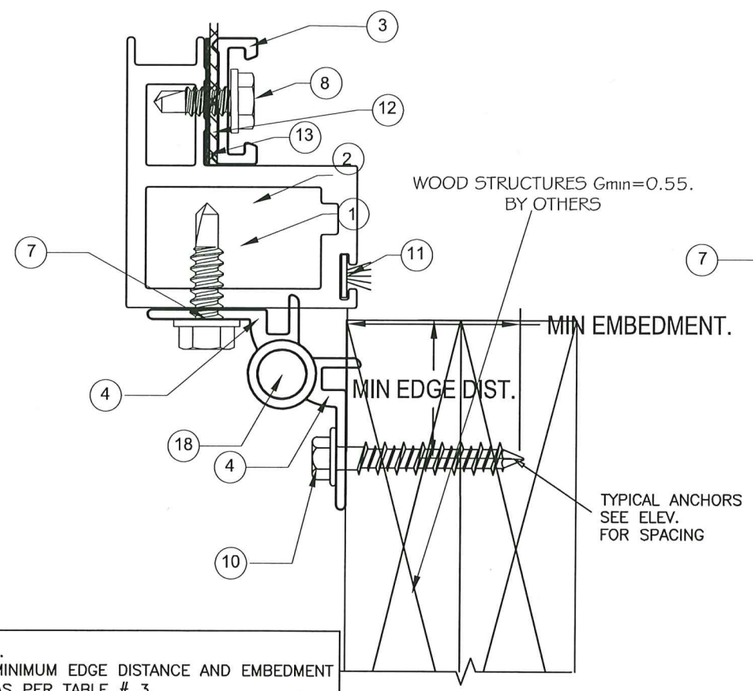

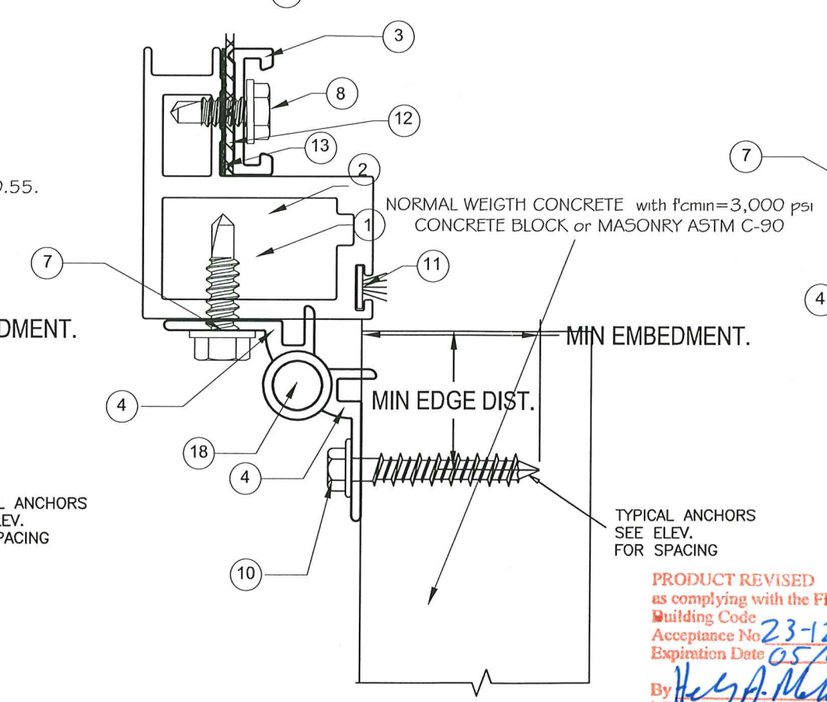

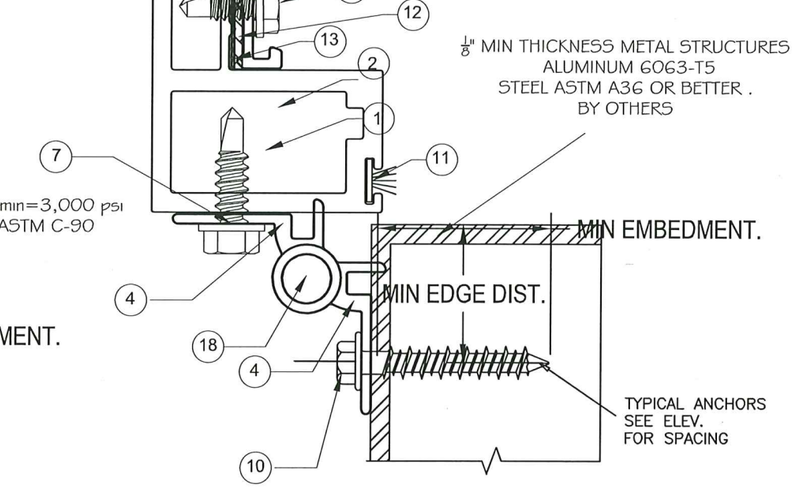

NOTES.
1.– MINIMUM EDGE DISTANCE AND EMBEDMENT AS PER TABLE # 3.
2.–SPACING AS PER TYPICAL ELEVATION # 1 OR # 2.
1/4" MAXIMUM GAP OR SHIM IN ANCHORS MORE THAN 1/4" GAP SHALL BE ENGINEERED BY FLORIDA PROFESSIONAL ENGINEER.

Signed & Sealed
December,21 2023

PRODUCT REVISED
as complying with the Florida
Building Code
Acceptance No 23-1222.02
Expiration Date 05/18/2027
By
Miami Dade Product Control

OSCAR YAMIR SOUFFRONT
FLA. PE. # 72462
C.A.N. 29697
No. 72462
STATE OF FLORIDA
PROFESSIONAL ENGINEER

Souffront Construction's Group, Ltd. Co.
2942 SW 156th AVENUE
Miami, FL 33185
Phone (786) 306-9417
Souffrontengineering@gmail.com

C.G.S. SALES INC.
44729 St. Rt.14
Columbiana, OH 44408
Phone (330) 501-4396 FAX No (330) 457-9539

OPERABLE IMPACT RESISTANT WINDOW SCREEN
LARGE AND SMALL MISSILE IMPACT RESISTANT

REV.	DATE	DESCRIPTION
1	05-16-2018	2017 FLORIDA BUILDING CODE (FBC) 6TH EDITION
2	06-14-2021	2020 FLORIDA BUILDING CODE (FBC) 7TH EDITION
3	12-20-2023	2023 FLORIDA BUILDING CODE (FBC) 8TH EDITION

PREPARED BY OSCAR YAMIR SOUFFRONT, P.E.
2171 SW BURMAN LANE
PORT SAINT LUCIE, FL 34984 PH. (786) 306-9417
FLORIDA LICENSE No. 72462
CERTIFICATE OF AUTHORIZATION No. 29697

DRAWN: YYS
CHECKED: OYS
SCALE: AS NOTED
DATE:12-16-16

DRAWING No. SCG0509-16

SHEET 7 OF 11

OPERABLE IMPACT RESISTANT WINDOW SCREEN

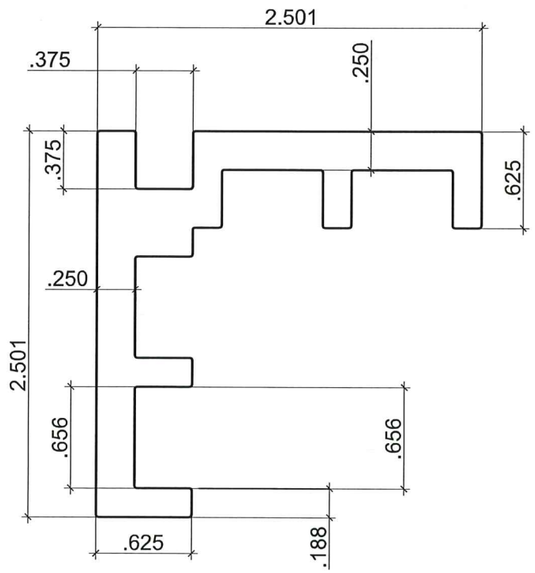

1 CORNER SHEAR BLOCK

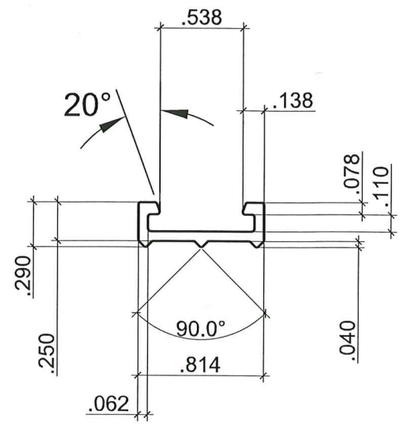

3

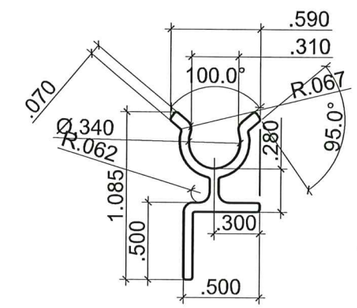

5 HORIZONTAL HINGE TO FRAME

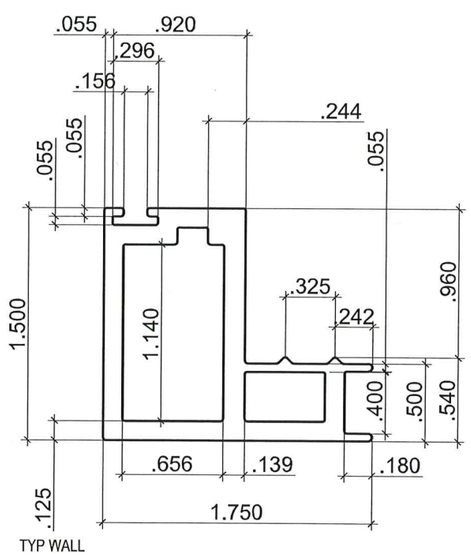

2 HEAD AND SILL FRAME

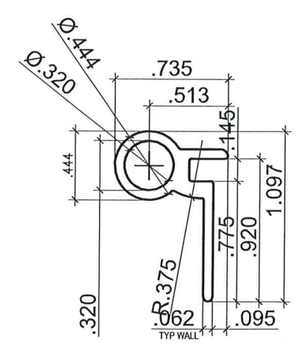

4 SECURITY DOOR C-BAR HINGE

PRODUCT REVISED
as complying with the Florida
Building Code
Acceptance No 23-1222.02
Expiration Date 05/14/2027
By
Miami Dade Product Control

Signed & Sealed
December 21 2023

OSCAR YAMIR SOUFFRONT
FLA. PE. # 72462
C.A.N. 29697
No. 72462
STATE OF FLORIDA
PROFESSIONAL ENGINEER

Type text here

Souffront Construction's Group, Ltd. Co.
2942 SW 156th AVENUE
Miami, FL 33185
Phone (786) 306-9417
Souffrontengineering@gmail.com

C.G.S. SALES INC.
44729 St. Rt.14
Columbiana, OH 44408
Phone (330) 501-4396 FAX No (330) 457-9539

OPERABLE IMPACT RESISTANT WINDOW SCREEN
LARGE AND SMALL MISSILE IMPACT RESISTANT

REV.	DATE	DESCRIPTION
1	05-16-2018	2017 FLORIDA BUILDING CODE (FBC) 6TH EDITION
2	06-14-2021	2020 FLORIDA BUILDING CODE (FBC) 7TH EDITION
3	12-20-2023	2023 FLORIDA BUILDING CODE (FBC) 8TH EDITION

PREPARED BY OSCAR YAMIR SOUFFRONT, P.E.
2171 SW BURMAN LANE
PORT SAINT LUCIE, FL 34984 PH. (786) 306-9417
FLORIDA LICENSE No. 72462
CERTIFICATE OF AUTHORIZATION No. 29697

DRAWN: YYS
CHECKED: OYS
SCALE: AS NOTED
DATE:12-16-16

DRAWING No. SCG0509-16

SHEET 8 OF 11

OPERABLE IMPACT RESISTANT WINDOW SCREEN

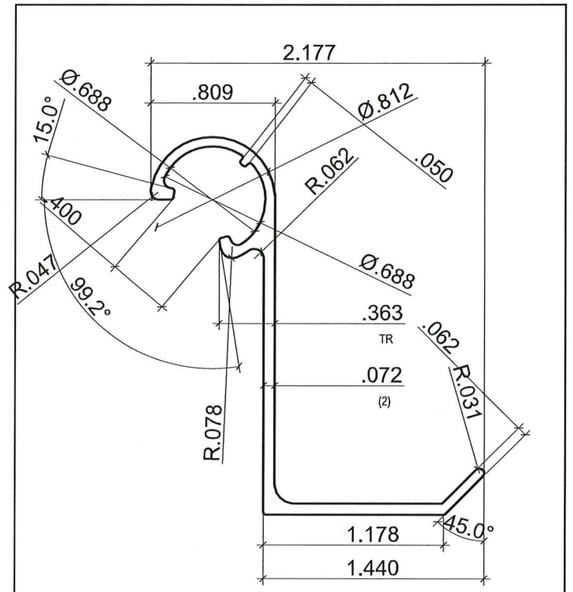

6 HORIZONTAL HINGE TO WALL

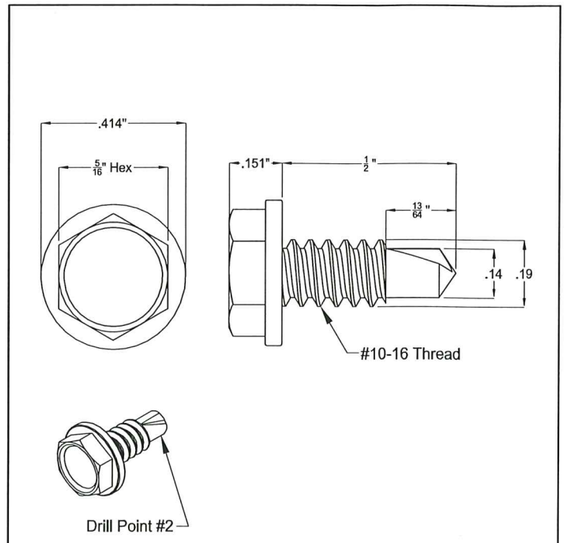

8 SELF DRILLING HH SS # 10-16

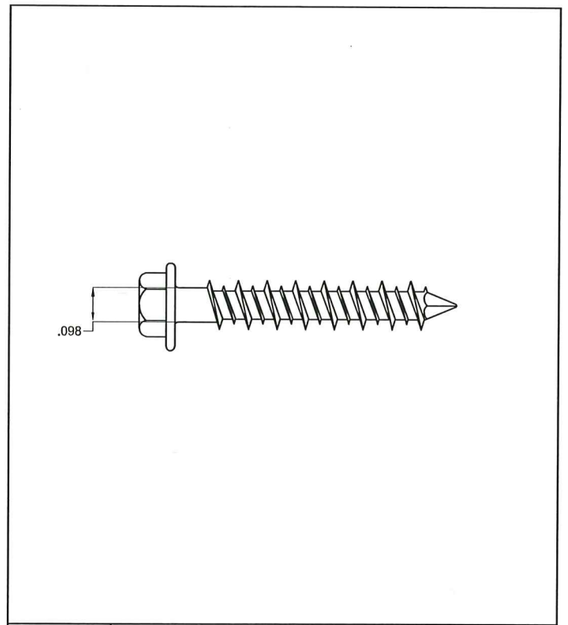

10 DEWALT ULTRACON HEX FLANGE HEAD

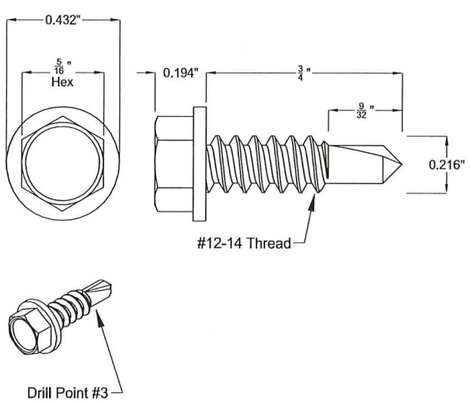

7 SELF DRILLING HH SS # 12-14

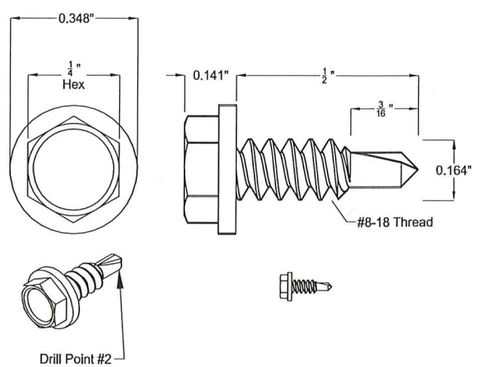

9 SELF DRILLING HH SS # 8-18

PRODUCT REVISED
as complying with the Florida
Building Code
Acceptance No 23-1222.02
Expiration Date 05/18/2027
By
Miami Dade Product Control

Signed & Sealed
December 21, 2023

OSCAR YAMIR SOUFFRONT
FLA. PE # 72462
C.A.N. 29697
No. 72462
STATE OF FLORIDA
PROFESSIONAL ENGINEER

Souffront Construction's Group, Ltd. Co.
2942 SW 156th AVENUE
Miami, FL 33185
Phone (786) 306-9417
Souffrontengineering@gmail.com

C.G.S. SALES INC.
44729 St. Rt.14
Columbiana, OH 44408
Phone (330) 501-4396 FAX No (330) 457-9539

OPERABLE IMPACT RESISTANT WINDOW SCREEN
LARGE AND SMALL MISSILE IMPACT RESISTANT

REV.	DATE	DESCRIPTION
1	05-16-2018	2017 FLORIDA BUILDING CODE (FBC) 6TH EDITION
2	06-14-2021	2020 FLORIDA BUILDING CODE (FBC) 7TH EDITION
3	12-20-2023	2023 FLORIDA BUILDING CODE (FBC) 8TH EDITION

PREPARED BY OSCAR YAMIR SOUFFRONT, P.E.
2171 SW BURMAN LANE
PORT SAINT LUCIE, FL 34984 PH. (786) 306-9417
FLORIDA LICENSE No. 72462
CERTIFICATE OF AUTHORIZATION No. 29697

DRAWN: YYS
CHECKED: OYS
SCALE: AS NOTED
DATE: 12-16-16

DRAWING No. SCG0509-16

SHEET 9 OF 11

OPERABLE IMPACT RESISTANT WINDOW SCREEN

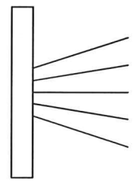

11 SCHLEGEL BRUSH WEATHER SEAL

13 RUBBER GASKET

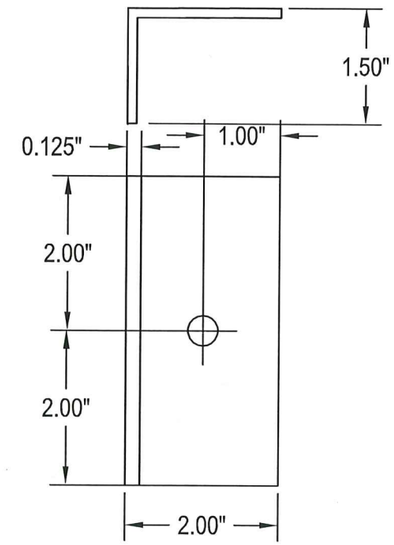

15 ALUMINUM ANGLE 2" x 1 $\frac{1}{2}$" x $\frac{1}{8}$" x 4" Long.

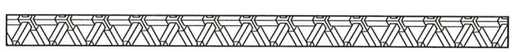

12 MESH 12 X 12 SCREEN

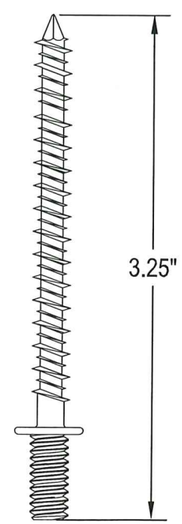

14 $\frac{1}{4}$" x 3 $\frac{1}{4}$" DEWALT PANEL MATE PRO ANCHOR

PRODUCT REVISED
as complying with the Florida
Building Code
Acceptance No 23-1222.02
Expiration Date 05/18/2027
By
Miami Dade Product Control

Signed & Sealed

December 21 2023

OSCAR YAMIR SOUFFRONT
FLA. PE # 72462
C.A.N. 29697

OSCAR YAMIR SOUFFRONT
72462
STATE OF FLORIDA
PROFESSIONAL ENGINEER

Souffront Construction's Group, Ltd. Co.
2942 SW 156th AVENUE
Miami, FL 33185
Phone (786) 306-9417
Souffrontengineering@gmail.com

C.G.S. SALES INC.
44729 St. Rt.14
Columbiana, OH 44408
Phone (330) 501-4396 FAX No (330) 457-9539

OPERABLE IMPACT RESISTANT WINDOW SCREEN
LARGE AND SMALL MISSILE IMPACT RESISTANT

REV.	DATE	DESCRIPTION
1	05-16-2018	2017 FLORIDA BUILDING CODE (FBC) 6TH EDITION
2	06-14-2021	2020 FLORIDA BUILDING CODE (FBC) 7TH EDITION
3	12-20-2023	2023 FLORIDA BUILDING CODE (FBC) 8TH EDITION

PREPARED BY OSCAR YAMIR SOUFFRONT, P.E.
2171 SW BURMAN LANE
PORT SAINT LUCIE, FL 34984 PH. (786) 306-9417
FLORIDA LICENSE No. 72462
CERTIFICATE OF AUTHORIZATION No. 29697

DRAWN: YYS
CHECKED: OYS
SCALE: AS NOTED
DATE:12-16-16

DRAWING No.	SHEET
SCG0509-16	10OF11

OPERABLE IMPACT RESISTANT WINDOW SCREEN

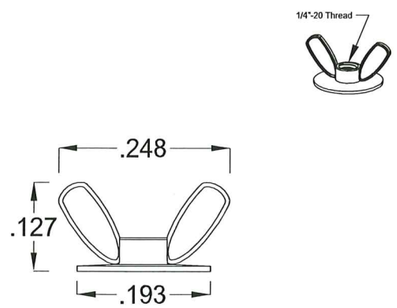

16	$\frac{1}{4}$" x 20 FLANGE WING NUT

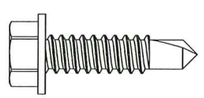

17	$\frac{1}{4}$" x 20 x 3/4" Self Drilling Screw

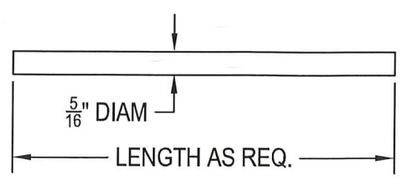

18	5/16" STEEL ROD

BILL OF MATERIAL (QUANTITIES AS REQUIRED)

ITEM	NAME	MATERIAL	NOTE
1	CORNER SHEAR BLOCK	ALUMINUM ALLOY 6063-T5	
2	HEAD AND SILL FRAME	ALUMINUM ALLOY 6063-T5	
3	ALUMINUM RETAINER BAR	ALUMINUM ALLOY 6063-T5	
4	SECURITY DOOR C-BAR HINGE	ALUMINUM ALLOY 6063-T5	DIE CX8208
5	HORIZONTAL HINGE TO FRAME	ALUMINUM ALLOY 6061-T5	
6	HORIZONTAL HINGE TO WALL	ALUMINUM ALLOY 6061-T5	
7	SELF DRILLING HH SS # 12-14	STAINLESS STEEL	PART # 90821A374
8	SELF DRILLING HH SS # 10-16	STAINLESS STEEL	PART # 98248A430
9	SELF DRILLING HH SS # 8-18	STAINLESS STEEL	PART # 90821A330
10	DEWALT ULTRACON HEX FLANGE HEAD	STEEL WITH CORROSION COATING	NOA # 21-0113.01
11	SCHLEGEL BRUSH WEATHER SEAL	POLYSTIRENE	
12	MESH 12 X 12 SCREEN	STAINLESS STEEL 304	
13	RUBBER GASKET	RUBBER	
14	$\frac{1}{4}$" x 3 $\frac{1}{4}$ " ELCO PANEL MATE PRO ANCHOR	STAINLESS STEEL	
15	ALUMINUM ANGLE 2" x 1 $\frac{1}{2}$" x $\frac{1}{8}$" x 4" Long.	ALUMINUM ALLOY 6061-T5	
16	$\frac{1}{4}$" x 20 FLANGE WING NUT	STAINLESS STEEL	
17	$\frac{1}{4}$" x 20 x 3/4" Self Drilling Screw	STAINLESS STEEL	
18	$\frac{5}{16}$" DIAM. STEEL ROD	STAINLESS STEEL	

PRODUCT REVISED
as complying with the Florida
Building Code
Acceptance No 23-1222.02
Expiration Date 05/18/2027
By
Miami Dade Product Control

Signed & Sealed

December,21 2023

OSCAR YAMIR SOUFFRONT
FLA. REG. # 72462
C.A.N. 29697
No. 72462
STATE OF FLORIDA
PROFESSIONAL ENGINEER

Souffront Construction's Group, Ltd. Co.
2942 SW 156th AVENUE
Miami, FL 33185
Phone (786) 306-9417
Souffrontengineering@gmail.com

C.G.S. SALES INC.
44729 St. Rt.14
Columbiana, OH 44408
Phone (330) 501-4396 FAX No (330) 457-9539

OPERABLE IMPACT RESISTANT WINDOW SCREEN
LARGE AND SMALL MISSILE IMPACT RESISTANT

REV.	DATE	DESCRIPTION
1	05-16-2018	2017 FLORIDA BUILDING CODE (FBC) 6TH EDITION
2	06-14-2021	2020 FLORIDA BUILDING CODE (FBC) 7TH EDITION
3	12-20-2023	2023 FLORIDA BUILDING CODE (FBC) 8TH EDITION

PREPARED BY OSCAR YAMIR SOUFFRONT, P.E.
2171 SW BURMAN LANE
PORT SAINT LUCIE, FL 34984 PH. (786) 306-9417
FLORIDA LICENSE No. 72462
CERTIFICATE OF AUTHORIZATION No. 29697

DRAWN: YYS
CHECKED: OYS
SCALE: AS NOTED
DATE:12-16-16

DRAWING No. SCG0509-16

SHEET 11OF 11